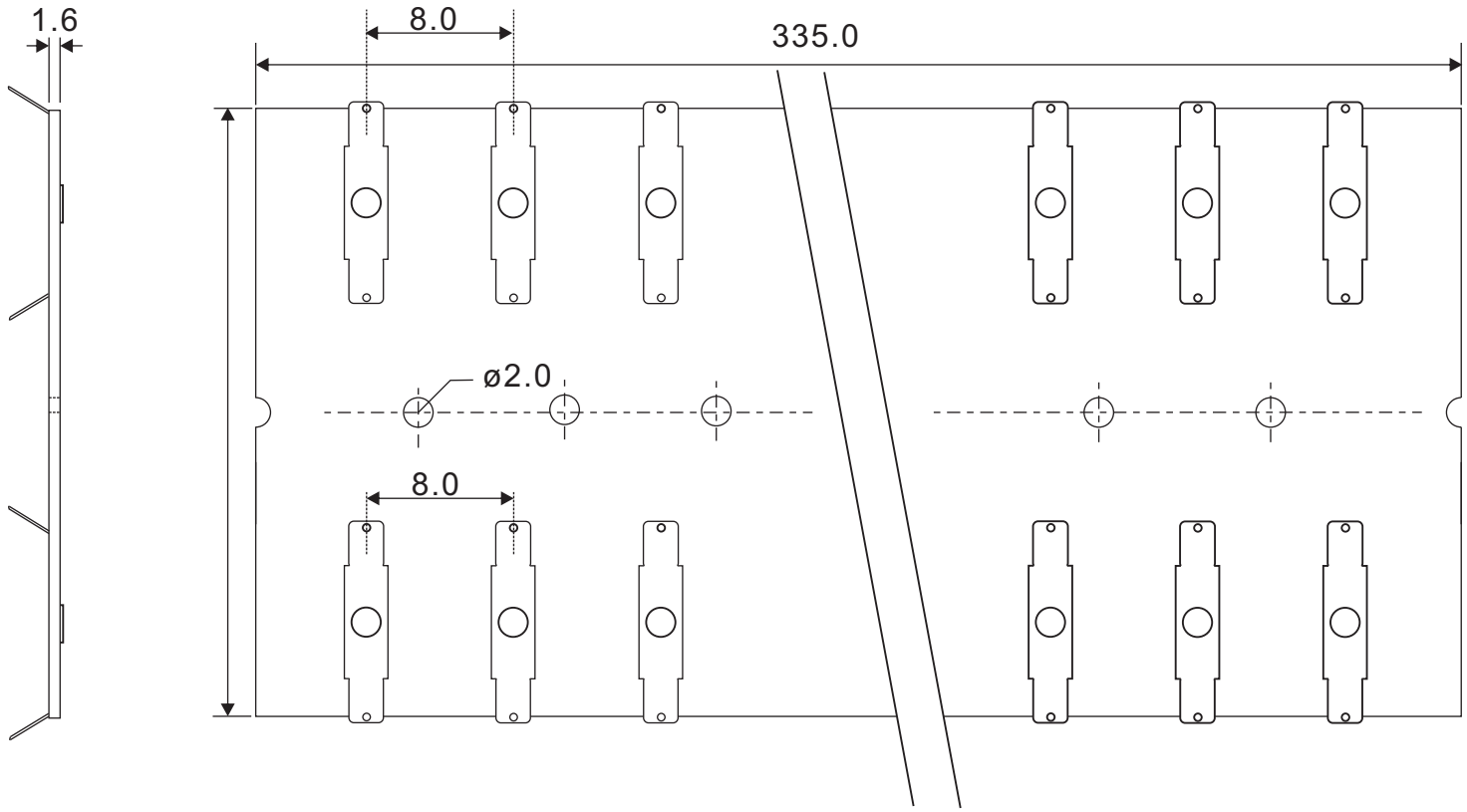

DATE	REVISION	APPROVAL BY

Unit	mm ±.01
DRAW BY	Andy
APPROVAL BY	Rikki
DATE	03-12-08

Dual Row Terminal Strip

Model: TS-8.0-D42P